Algebra I

Enrique Castillo Ron
Universidad de Castilla-La Mancha

Royal Academy of Engineering

Royal Academy of Sciences

Enrique Castillo

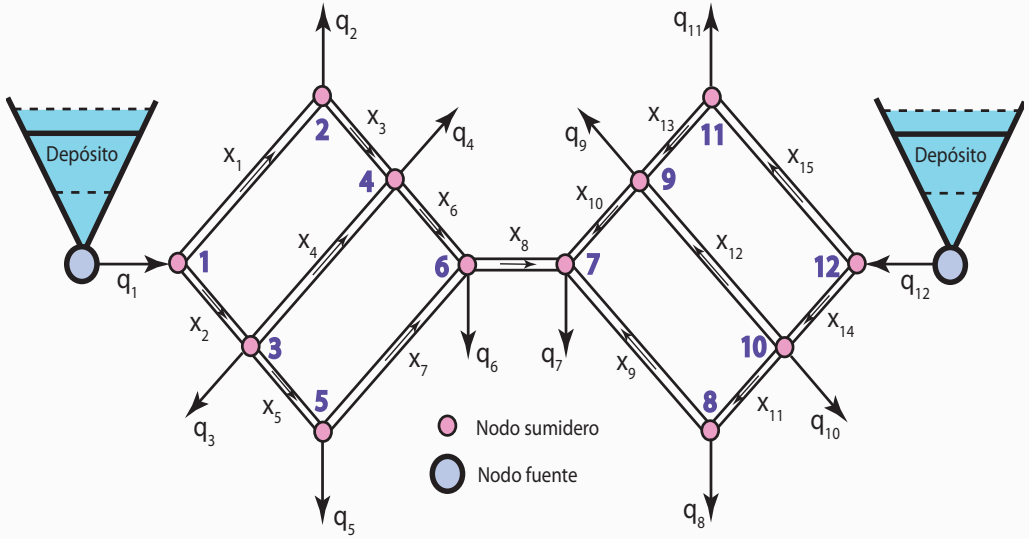

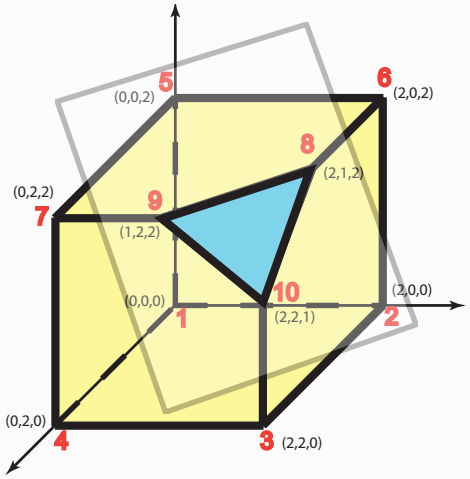

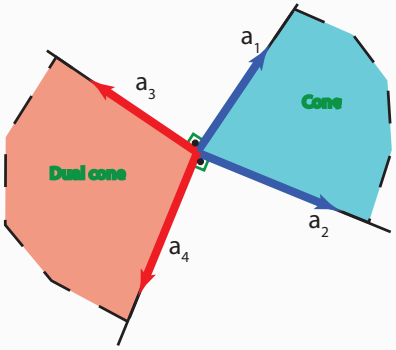

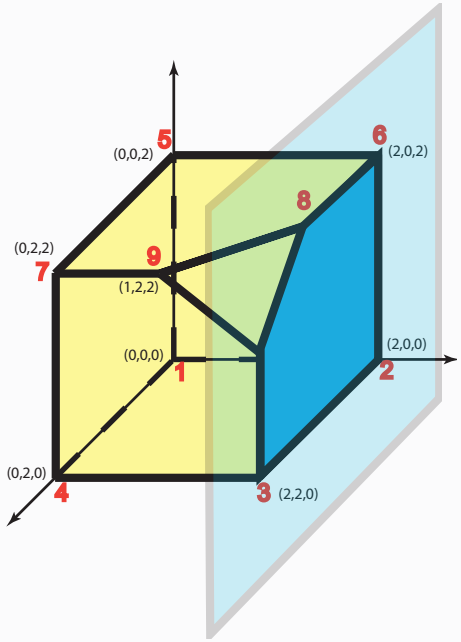

MECHANICAL SYSTEM

MECHANICAL SYSTEM

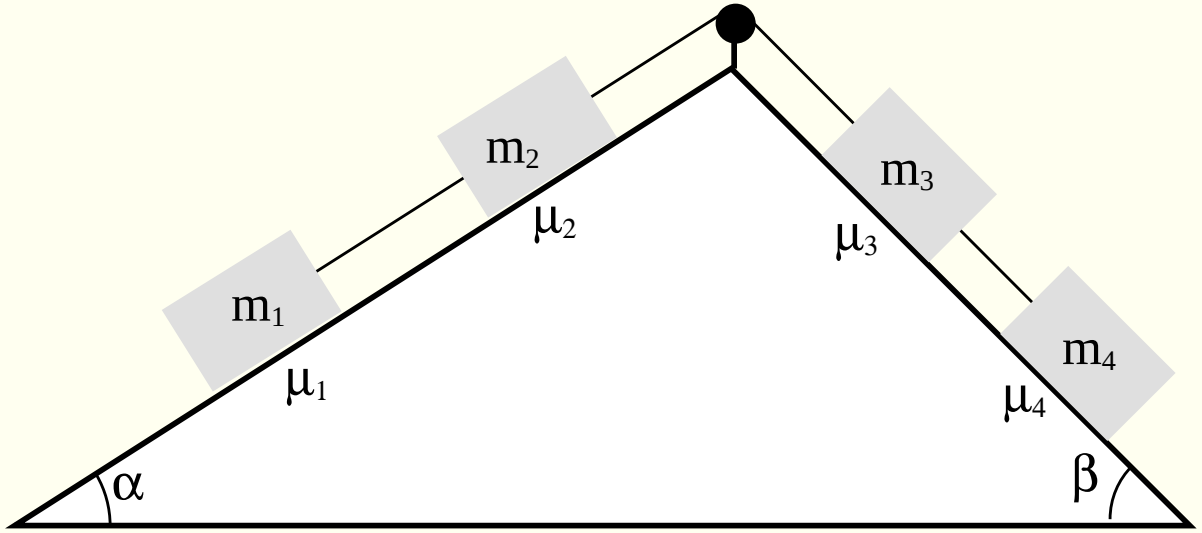

Consider a mechanical system consisting of four masses m_1, m_2, m_3 and m_4 sliding on two inclined planes, connected by a rope that goes around a pulley placed at the top (see Figure).

Let μ_i be the friction coefficient associated with the mass m_i, $i = 1, 2, 3, 4$.

According to Newton's second law, the algebraic sum of the forces acting on a body is the product of its mass by acceleration.

MECHANICAL SYSTEM

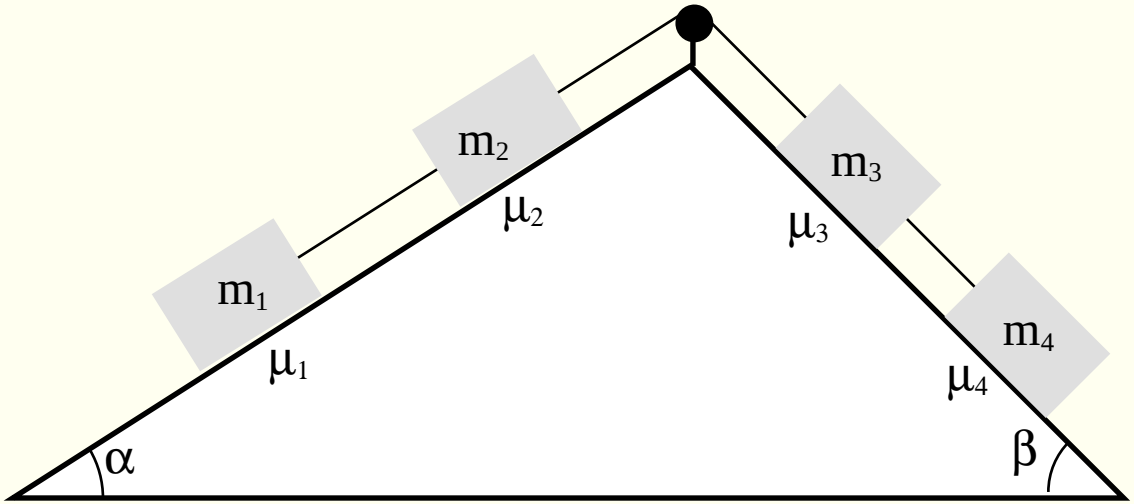

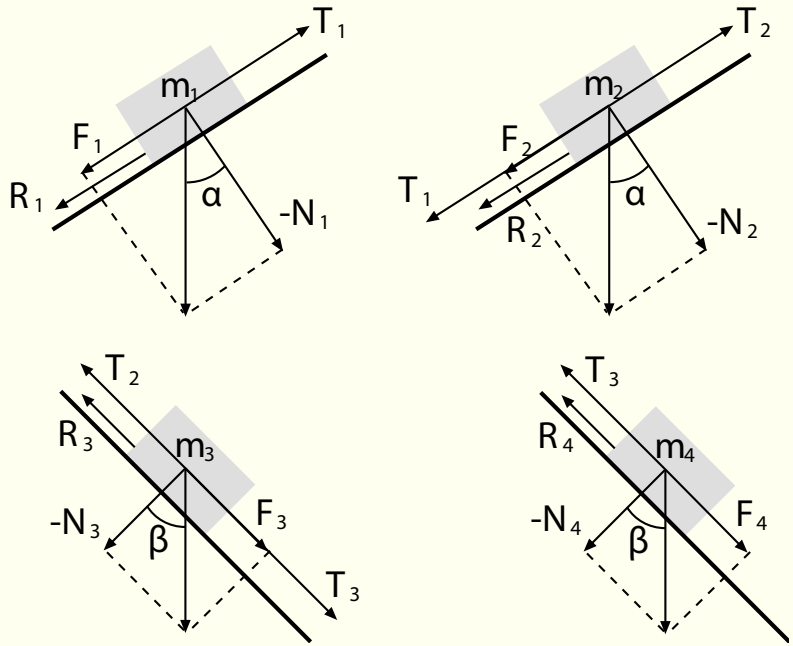

The Figure shows the forces that act in each of the four masses of the mechanical system, where F_i is the component of the weight in the direction of movement, T_i is the tension of the string, and R_i is the friction force.

$$F_i = \begin{cases} m_i g \sin\alpha, & if \quad i = 1, 2, \\ m_i g \sin\beta, & if \quad i = 3, 4, \end{cases}$$

$$R_i = \begin{cases} \mu_i m_i g \cos\alpha, & if \quad i = 1, 2, \\ \mu_i m_i g \cos\beta, & if \quad i = 3, 4. \end{cases}$$

MECHANICAL SYSTEM

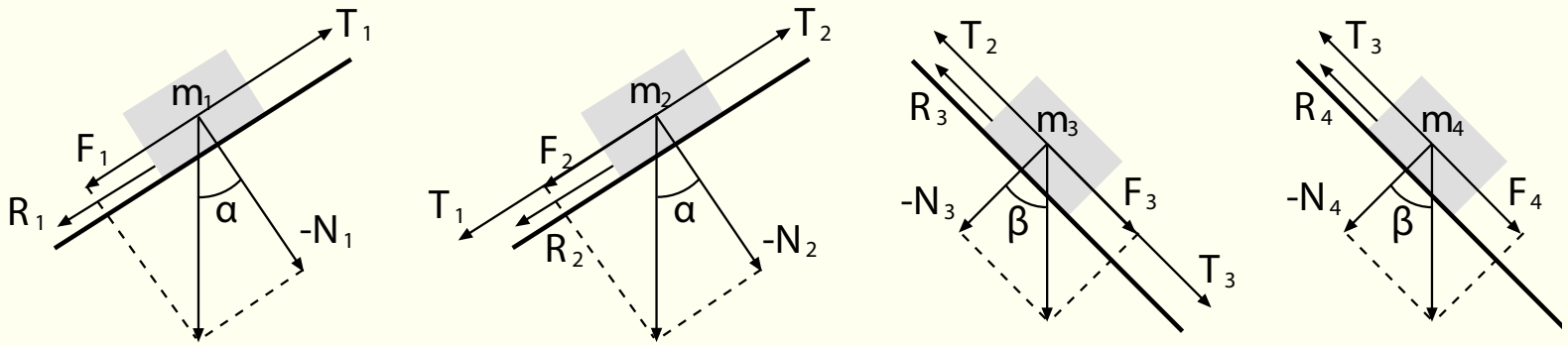

Assume that the system moves from left to right, the tensions and acceleration can be obtained from the system:

$$
\begin{aligned}
T_1 - F_1 - R_1 &= m_1 a \\
T_2 - T_1 - F_2 - R_2 &= m_2 a \\
T_3 + F_3 - T_2 - R_3 &= m_3 a \\
F_4 - T_3 - R_4 &= m_4 a,
\end{aligned}
\tag{1}
$$

or in equivalent matrix form

$$
\begin{pmatrix} -1 & 0 & 0 & m_1 \\ 1 & -1 & 0 & m_2 \\ 0 & 1 & -1 & m_3 \\ 0 & 0 & 1 & m_4 \end{pmatrix}
\begin{pmatrix} T_1 \\ T_2 \\ T_3 \\ a \end{pmatrix}
=
\begin{pmatrix} -m_1 g(\sin\alpha + \mu_1 \cos\alpha) \\ -m_2 g(\sin\alpha + \mu_2 \cos\alpha) \\ m_3 g(\sin\beta - \mu_3 \cos\beta) \\ m_4 g(\sin\beta - \mu_4 \cos\beta) \end{pmatrix}
\tag{2}
$$

$$T_1, T_2, T_3, a \geq 0.$$

MECHANICAL SYSTEM

If we analyze the compatibility of the system:

$$\begin{pmatrix} -1 & 0 & 0 & m_1 \\ 1 & -1 & 0 & m_2 \\ 0 & 1 & -1 & m_3 \\ 0 & 0 & 1 & m_4 \end{pmatrix} \begin{pmatrix} T_1 \\ T_2 \\ T_3 \\ a \end{pmatrix} = \begin{pmatrix} -m_1 g(\sin\alpha + \mu_1 \cos\alpha) \\ -m_2 g(\sin\alpha + \mu_2 \cos\alpha) \\ m_3 g(\sin\beta - \mu_3 \cos\beta) \\ m_4 g(\sin\beta - \mu_4 \cos\beta) \end{pmatrix} \tag{3}$$

$$T_1, T_2, T_3, a \geq 0.$$

it results:

Iteration 1					Iteration 2					Iteration 3					Iteration 4				
a_1	v_1^1	v_2^1	v_3^1	v_4^1	a_2	w_1^2	v_1^2	v_2^2	v_3^2	a_3	w_1^3	w_2^3	v_1^3	v_2^3	a_4	w_1^4	w_2^4	w_3^4	v_1^4
-1	**1**	0	0	0	0	-1	**1**	0	0	0	-1	-1	**1**	0	m_1	-1	-1	-1	1
1	**0**	1	0	0	-1	0	**1**	0	0	0	0	-1	**1**	0	m_2	0	-1	-1	1
0	**0**	0	1	0	1	0	**0**	1	0	-1	0	0	**1**	0	m_3	0	0	-1	1
0	**0**	0	0	1	0	0	**0**	0	1	1	0	0	**0**	1	m_4	0	0	0	1
t^1	**-1**	1	0	0	t^2	0	**-1**	1	0	t^3	0	0	**-1**	1	t^4				

And since we can pivot, because $m_1 + m_2 + m_3 + m_4 > 0$, The orthogonal subspace is the null subspace, that is, the system is always compatible.

MECHANICAL SYSTEM

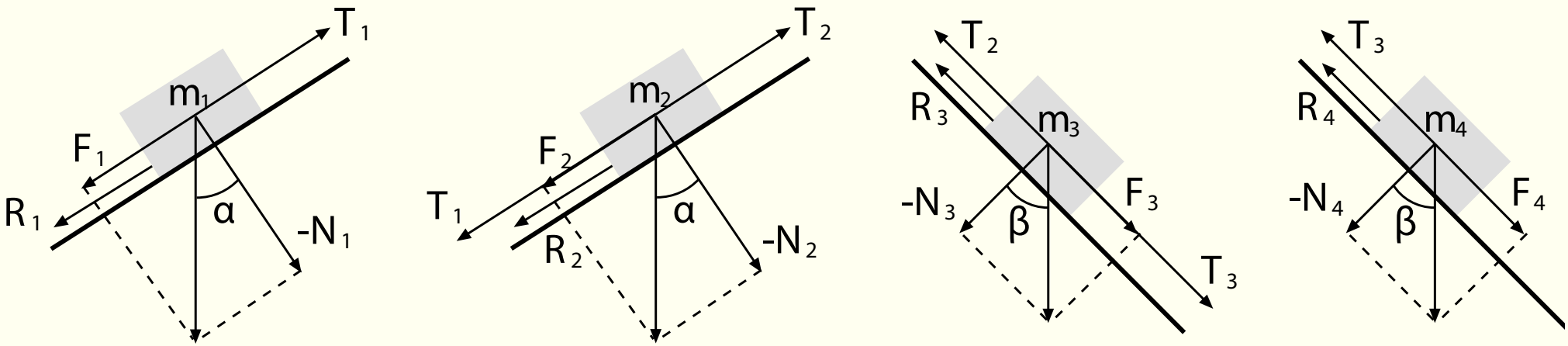

On the other hand, if the movement is from right to left, the system of equations becomes:

$$
\begin{aligned}
F_1 - T_1 - R_1 &= m_1 a \\
T_1 - T_2 + F_2 - R_2 &= m_2 a \\
T_2 - F_3 - T_3 - R_3 &= m_3 a \\
T_3 - F_4 - R_4 &= m_4 a.
\end{aligned}
\tag{4}
$$

EXAMPLE OF ELECTRIC CIRCUITS

ELECTRIC CIRCUITS

Circuits or electrical networks are built by interconnecting components.

In this example only resistance and batteries are considered. The batteries connected in series determine terminal voltages that depend on the way in which polarities of them are organized.

In figure (a) the terminal voltage is $V_1 + V_2$, while in (b) the terminal voltage is $V_1 - V_2$.

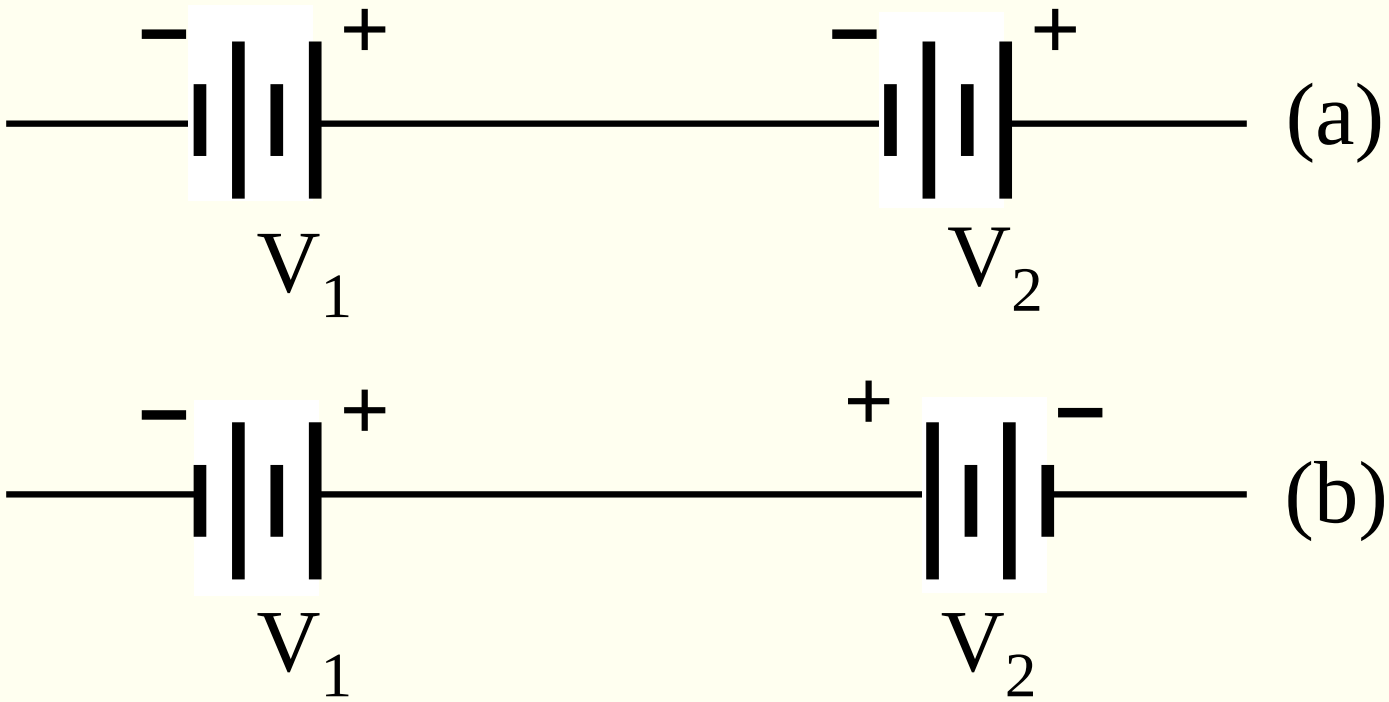

ELECTRIC CIRCUITS

All problems associated with electrical circuits that contain batteries and resistors can be resolved using two important laws:

1. **Ohm's law** : when a resistor is connected to a battery, the relation between the voltage V and the current intensity I is given by

$$V = RI$$

   where R is the resistance.

2. **Kirchhoff's law**: which states that the algebraic sum of the voltages of a loop closed must be equal to zero. Note that some of these voltages can be positive and others negative

ELECTRIC CIRCUITS

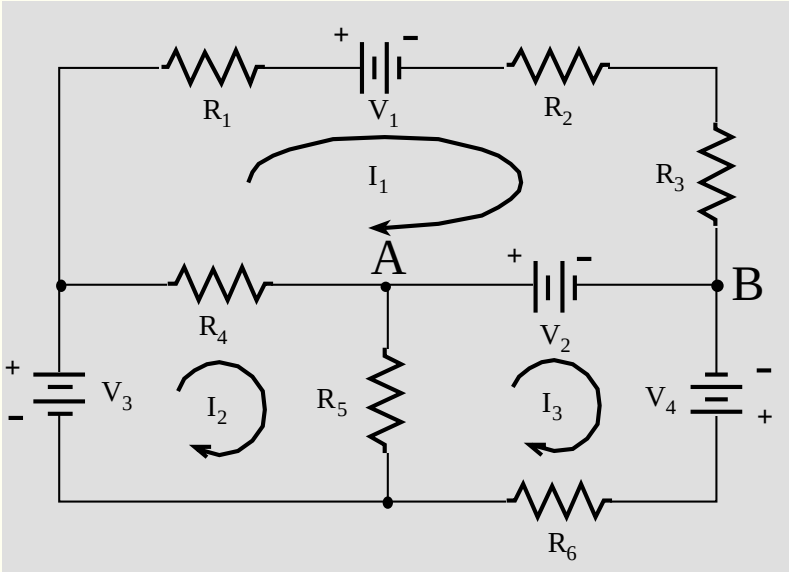

Consider the closed circuit of the Figure. In accordance with the previous laws, the currents of the three loops can be calculated by solving the following system of equations:

$$\begin{pmatrix} R_1+R_2+R_3+R_4 & -R_4 & 0 \\ -R_4 & R_4+R_5 & -R_5 \\ 0 & -R_5 & R_5+R_6 \end{pmatrix} \begin{pmatrix} I_1 \\ I_2 \\ I_3 \end{pmatrix} = \begin{pmatrix} -V_1+V_2 \\ V_3 \\ -V_2+V_4 \end{pmatrix}. \tag{5}$$

This system is always compatible, as can be seen next.

ELECTRIC CIRCUITS

If we analyze the compatibility of the system:

$$\begin{pmatrix} R_1+R_2+R_3+R_4 & -R_4 & 0 \\ -R_4 & R_4+R_5 & -R_5 \\ 0 & -R_5 & R_5+R_6 \end{pmatrix} \begin{pmatrix} I_1 \\ I_2 \\ I_3 \end{pmatrix} = \begin{pmatrix} -V_1+V_2 \\ V_3 \\ -V_2+V_4 \end{pmatrix}.$$

it results:

Iteration 1				Iteration 2			Iteration 3	
a_1	v_1^1	v_2^1	v_3^1	a_2	v_1^2	w_1^2	a_3	w_1^3
0	**1**	0	0	$-R_4$	**1**	0	$R_1+R_2+R_3+R_4$	$\frac{(R_4+R_5)(R_5+R_6)}{R_5R_4}-\frac{R_5}{R_4}$
$-R_5$	**0**	1	0	R_4+R_5	**0**	$\frac{R_5+R_6}{R_5}$	$-R_4$	$\frac{R_5+R_6}{R_5}$
R_5+R_6	**0**	0	1	$-R_5$	**0**	1	0	1
t^1	**0**	$-R_5$	R_5+R_6	t^2	$-R_4$	$\frac{(R_4+R_5)(R_5+R_6)}{R_5}-R_5$		**H**

and since we can pivot at iteration 3, because

$$H=\frac{R_1R_4R_5+R_2R_4R_5+R_3R_4R_5+R_1R_4R_6+R_2R_4R_6+R_3R_4R_6+R_1R_5R_6+R_2R_5R_6+R_3R_5R_6+R_4R_5R_6}{R_4R_5}>0$$

the orthogonal subspace is the null subspace, that is, the system is always compatible.